EXTRACTORES TUBULARES

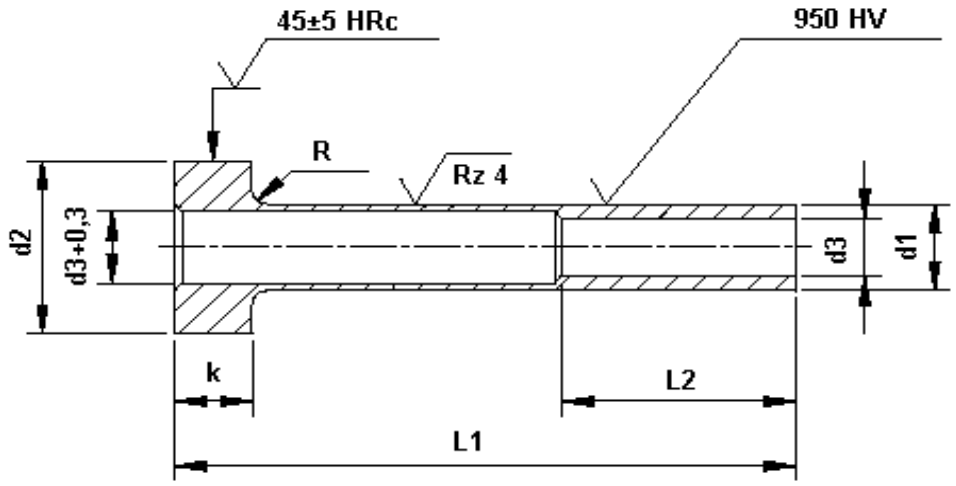

POLEGADAS

Material 1.2344 Nitrurado

			L2		L1								
d1	d2	d3	min	k	3"	4"	5"	6"	7"	8"	9"	10"	12"
3/16	3/8	3/32	1 3/4	3/16	23.95€	26.44€	28.94€	31.93€	34.92€	47.89€			
7/32	13/32	1/8	1.75	3/16	19.46€		29.93€	31.93€	34.92€	47.89€			
1/4	7/16	5/32	1.75	3/16	19.46€	25.94€	29.93€	37.91€	41.41€	46.39€	50.88€	55.37€	75.32€
5/16	1/2	3/16	1.75	1/4	18.46€	23.95€	28.44€	32.43€	39.91€	45.40€	49.39€	53.38€	74.33€
11/32	9/16	7/32	1.75	1/4	18.46€	23.95€	28.44€	32.43€	39.91€	45.40€	49.39€	53.38€	74.33€
3/8	5/8	1/4	1.75	1/4	18.46€	23.95€	28.44€	32.43€	39.91€	45.40€	49.39€	53.38€	74.33€
7/16	11/16	5/16	1.75	1/4	18.46€	23.95€	28.44€	32.43€	39.91€	45.40€	49.39€	53.38€	74.33€
1/2	3/4	3/8	1.75	1/4	18.96€	24.45€	29.43€	33.42€	40.91€	46.89€	50.88€	55.37€	78.82€
5/8	7/8	7/16	1.75	1/4	21.45€	25.44€	30.93€	34.92€	41.90€	48.39€	52.88€	57.37€	82.31€
11/16	15/16	1/2	1.75	1/4	22.95€	27.44€	32.43€	37.41€	43.90€	50.38€	54.87€	59.86€	84.30€
3/4	1	9/16	1.75	1/4		34.42€	38.41€	42.40€	46.89€	50.88€	56.37€	61.36€	87.29€
7/8	1 1/8	5/8	1.75	1/4		39.41€	43.40€	48.39€	51.88€	56.87€	62.35€	67.84€	92.28€
1	1 1/4	3/4	1.75	1/4		44.40€	48.89€	52.88€	57.87€	62.35€	68.84€	74.33€	97.27€

dimensões em polegadas **01.08.01**

FORNECEMOS MEDIDAS ESPECIAIS EM 2 SEMANAS